Supreme Court, U.S.
FILED
JAN 21 1972
E. ROBERT SEAVER, CLERK

IN THE

Supreme Court of the United States

October Term, 1971

No. 71-945

JEROME H. LEMELSON,

Petitioner,

versus

TOPPER CORPORATION (by change of name from DeLuxe Reading Corporation) and THE GREAT ATLANTIC & PACIFIC TEA CO., INC.,

Respondents.

PETITION FOR WRIT OF CERTIORARI TO THE UNITED STATES COURT OF APPEALS FOR THE SECOND CIRCUIT

ELIOT S. GERBER
Attorney for Petitioner
WYATT, GERBER & SHOUP
230 Park Avenue
New York, New York 10017

INDEX

	Page
OPINIONS BELOW	1
JURISDICTION	2
QUESTIONS PRESENTED	2
CONSTITUTIONAL PROVISIONS AND STATUTE INVOLVED	3
STATEMENT OF THE CASE	4
THE REASONS THE WRIT SHOULD BE GRANTED	5
I. The Guidelines As To Obviousness Have Failed	5
II. The Mistaken Emphasis on the "Patent Clause" Has Caused Error	8
III. The Prior References When Combined Do Not Work -- The Second Circuit's Standard of Obviousness Needs Correcting	11
APPENDIX A Circuit Court Decision	1a
APPENDIX B District Court Decision	10a
APPENDIX C Some Notes Toward More Definite Guidelines As To Obviousness of Patent Claims Under 35 U.S.C. §103	27a
APPENDIX D Percentages of Patents Found Valid By United States Circuit Courts Reported in the United States Patents Quarterly from the Time of the Su-	

INDEX (Continued)

Page

preme Court Decision in *Graham et al.* v. *John Deere Co. of Kansas City et al* 381 U.S. 1 (Decided February 21, 1966) through the December 20, 1971 Issue of the United States Patents Quarterly ... 29a

TABLE OF CITATIONS

Cases:

Anderson's Black-Rock, Inc. v. Pavement Salvage Co., 396 U.S. 57, 1969 ... 6

Blonder-Tongue Laboratories, Inc. v. University of Illinois Foundation, 402 U.S. ____ (No. 338, Oct. Term 1970, Decided May 3, 1971) ... 2

Brooks v. U.S., 267 U.S. 432 (1925) ... 10

Crosby Teletronics Corp. v. General Electric Co., Inc., 392 F.2d 29 (1968) ... 28a

Diamond Rubber Co. v. Consolidated Rubber Tire Co., 220 U.S. 428, 435 (1911) ... 28a

Gibbons v. Ogden, Wheat 1 (1824) ... 10

Graham v. John Deere Co., 383 U.S. 1 (1966) ... 2

Greening Nursery Co. v. J and R Tool and Mfg. Co., 252 F.S. 117 (D.C. Iowa 1966), aff'd 376 F.2d 738 (8th Cir. 1967) ... 27a

Jeddeloh Brothers Sweed Mills, Inc. v. Coe Mfg. Co., 375 F.2d 85, 89 (9th Cir. 1966) ... 27a

Hotchkiss v. Greenwood, 11 How. 248 (1951) ... 28a

Lee v. Runge, Supreme Ct. No. 70-263 (dissent on denial of Petition for Writ of Certiorari Oct. 19, 1971) 171 USPQ 322 ... 9

TABLE OF CITATIONS (Continued)

	Page
Lochner v. New York, 198 U.S. 45 (1905)	11
Nigro v. U.S., 276 U.S. 332 (1928)	10
Reiner v. I. Leon Co., 285 F.2d 501 (2nd Cir. 1960)	27a
Skee-Trainer, Inc. v. Garelick Mfg. Co., 361 F.2d 895 (8th Cir. 1966)	28a
Sonzinsky v. U.S., 300 U.S. 506 (1937)	10
The Barbed Wire Patent, 143 U.S. 275, 282 (1892)	27a
Trimble Products Inc. v. W.T. Grant Co., 283 F.S. 707 (DC SD NY 1968)	27a
United States v. Darby, 312 U.S. 100 (1941)	10
Wickard v. Filburn, 317 U.S. 111 (1942)	10
Constitution:	
Article I - Section 8 - Cl. 3 and Cl. 8	9, 10
Code:	
28 U.S.C. §1254(1)	2
28 U.S.C. §§1332 and 1338	2
35 U.S.C. §103	3
49 U.S.C.A. §1(18)	10
49 U.S.C.A. §1371	10
47 U.S.C.A. §301 et seq.	10
Authorities:	
After Black Rock: New Tests of Patentability — The Old Tests of Invention. *Geo. Wash. L. Rev.* Vol. 39 No. 1. Oct. 1970, page 123	6

TABLE OF CITATIONS (Continued)

	Page
Invention and Economic Growth, J. Schmookler (1966) page 31	6
Cost Benefit Study of Patent Systems, *Idea*, Vol. 11, No. 3, Fall 1967, page 351	8
Do we Need a Patent System, *Journ. of Patent Off. Soc.* Vol. 51, No. 8, Aug. 1969, pg. 501	8
Webster's N. Int. Dict. 2nd Ed. 1958	11

IN THE
SUPREME COURT OF THE UNITED STATES
October Term, 1971

No.

JEROME H. LEMELSON,
Petitioner,

versus

TOPPER CORPORATION (by change of name from DeLuxe Reading Corporation) and
THE GREAT ATLANTIC & PACIFIC TEA CO., INC.,
Respondents.

PETITION FOR WRIT OF CERTIORARI TO THE UNITED STATES COURT OF APPEALS FOR THE SECOND CIRCUIT

PETITION FOR WRIT OF CERTIORARI

Petitioner, Jerome H. Lemelson, respectfully prays that a writ of certiorari issue to review the judgment of the United States Court of Appeals for the Second Circuit in its cause numbered 71-1253 decided October 22, 1971.

OPINIONS BELOW

The opinion of the Court of Appeals in this cause is set forth in the appendix to this petition commencing

at page 1a; it has not yet been officially reported, but has been unofficially reported at 171 USPQ 705.

The opinion of the District Court is reported at 321 F.Supp. 1281 and is reproduced in the appendix commencing at page 10a.

JURISDICTION

The Judgement of the Court of Appeals was entered October 22, 1971. Jurisdiction of this Court is invoked pursuant to 28 U.S.C. 1254(1). The basis of jurisdiction in the District Court was 28 U.S.C. §§1332 and 1338.

QUESTIONS PRESENTED

I. Is it not timely for this Court, in view of the impetus to forum shopping occasioned by *Blonder-Tongue Laboratories, Inc. v. University of Illinois Foundation*, 402 U.S. (No. 338-Oct. Term 1970, decided May 3, 1971) to define more specific and internally consistent guidelines for patent non-obviousness in view of the ineffectiveness of the guidelines of *Graham v. John Deere Co.*, 383 U.S. 1 (1966) to obtain national uniformity?

II. Is it necessary to apply a restrictive standard of invention derived from the Patent Clause of the Constitution when patents may be upheld under the Commerce Clause, regardless if they are to "inventors" and regardless if they "promote science and the useful arts?"

III. Is the issue of obviousness resolved by a combination of two or three prior references when the resulting combination (i) will not work and (ii) is different than the patent claim?

CONSTITUTIONAL PROVISIONS AND STATUTE INVOLVED

The Constitutional provisions and statute involved are:

Constitution of the United States, Article I, Section 8:

"The Congress shall have Power * * *

"To regulate Commerce with foreign Nations, and among the several States, * * *

"To promote the Progress of Science and useful Arts, by securing for limited Times to Authors and Inventors the exclusive Right to their respective Writings and Discoveries; * * *"

The Patent Act, 35 U.S. Code, Section 103:

"A patent may not be obtained though the invention is not identically disclosed or described as set forth in section 102 of this title, if the differences between the subject matter

sought to be patented and the prior art are such that the subject matter as a whole would have been obvious at the time the invention was made to a person having ordinary skill in the art to which said subject matter pertains. Patentability shall not be negatived by the manner in which the invention was made."

STATEMENT OF THE CASE

This is a patent infringement action involving a simple mechanism — a toy gun. The only issue here is the validity of one claim of the patent under 35 U.S.C. §103.

Lemelson, a sole "garret" inventor who holds over 200 patents, sued the manufacturer Deluxe Reading Company (now, by change of name, Topper Corporation) and its distributor Atlantic and Pacific Tea Co. in the United States District Court for the Southern District of New York. After trial, Judge John M. Cannella found the patent valid (his opinion is reproduced as Appendix B). The Second Circuit Court of Appeals reversed and held the patent invalid (their opinion is Appendix A).

The patent is to a toy gun. When the trigger is pulled, the gun emits a sound which a child associates with a ricochet sound generated by a bullet in flight.

The mechanism is simple. It consists of a trigger, a bellows (an expandable air container), a reed in the

bellows, a "compression means", such as a plunger, a catch to lock the compression means, and a spring.

The prior art is likewise simple. The Bocchino patent is to a bellows having a reed which makes noise on compression and the Lawson patent shows a bellows having a reed which makes noise on expansion. The Everett patent shows a toy gun having a trigger, a hammer and a bellows which blow out powder to simulate smoke.

The error in the Circuit Court's opinion was in papering over the fact that the prior art relied upon, when combined, would not work and would not be what Lemelson claimed. That opinion set up a straw man of an alleged "contribution" and ignored his real contribution of the additional spring to push away the bellows compression means (the piston).

THE REASONS THE WRIT SHOULD BE GRANTED

I. The Guidelines As To Obviousness Have Failed,

About 20 to 25 Petitions for Writ of Certiorari are filed each year in patent, trademark and copyright cases. But, of these, few raise the basic issue of the requirement of non-obviousness for patent validity, and those few may relate to complex electrical or chemical arts.

The guidelines laid down by this Court in the five patent cases heard on that issue, since 1948, have failed

to bring statistical uniformity among the Circuits.[1] Such failure to obtain uniformity is due to an internal conflict of language and intent by the decisions of this Court and a lack of precision in those decisions.[2] Perhaps more importantly, the "standard of invention" historically has varied with the political temper of the times.[3] In the period before the New Deal, most patents were held valid but today few survive in some of the Circuits.

Since 1939[4] this Court has not heard any case in which the Circuit Court held the patent invalid (except for conflict of Circuit cases). The only certain effect of this Court's non-consideration and the non-uniformity of the Circuits, particularly in view of the Blonder-Tongue case, in which the patentee cannot generally sue again if he loses, is to make forum shopping imperative. One hears a lot these days about decentralization; but such non-uniformity of patent litigation only enriches mid-west lawyers.

---

[1]From about 4% (8th Circuit) to 46% (5th Circuit), of parents held valid, see Appendix D.

[2]"In *Anderson's-Black Rock, Inc.* v. *Pavement Salvage Co.* (396 US 57, 1969) the Supreme Court revived the illusory 'invention standard as requisite of patent validity.'" After Black Rock: New Tests of Patentability — The Old Tests of Invention. Geo. Wash. L. Rev. Vol. 39, No. 1, Oct. 1970, p. 123.

[3]33 per cent invalidated in 1925-1929 by Courts of Appeal to 96%, 89% and 88% percent invalidated in the 8th, 4th and 10th Circuits in recent years, see Invention and Economic Growth, J. Schmookler (1966) p. 31, and Appendix D.

[4]Standard Brands Inc. v. National Grain Yeast Corp. 308 US 34 (1939).

In patent practice the courts, not Congress, determine and effectively make legal policy. The courts should accordingly be aware of the consequences of their policies. Results of the patent policies of the Second Circuit include the following: (i) An individual inventor holding a patent which is clearly infringed cannot obtain legal representation on a contingent basis, due primarily to the great expenses of patent litigation and the low chances of a patent being held valid. In every other field of law, such as criminal, negligence or contract actions, a person with a meritorious claim can usually obtain contingent or free counsel and have his day in court; (ii) An inventor, seeking to start a business based upon an invention, has difficulty in obtaining venture capital based upon his patent rights;[5] (iii) Business competition is lessened and the larger firms grow larger, as many small companies, lacking the financial strength of larger companies, are able to enter a market only if their improved product can be protected against copying; (iv) Because there is no meaningful patent protection[6] inventors will not develop or disclose their inventions and investors will not invest. Perhaps hundreds of thousands of jobs fail to be created because such developments and investments are lacking; and (v) American companies, in markets in which new products replace obsolete prod-

---

[5]Many of the businesses and jobs, due to inventions, are based upon simple inventions, as in this case, and not sophisticated technology.

[6]When, as in the Second Circuit, over 80% of patents are held invalid or not infringed, in cases in which attorneys thought the patents good enough to bring to litigation, the present grant becomes a snare and a delusion and is almost as bad as no patent system at all.

ucts, such as consumer electronics, cannot successfully compete, even aside from low wage labor, as other countries (Japan and Germany) have strong patent systems which encourage their industries in making research and development expenditures.

We submit, as Appendix C, some notes toward a definition of guidelines,[7] and will submit more detailed comments should this Petition be granted. Investors and industry, faced with such uncertainty, put their money in advertising, amusement parks and real estate — anywhere but in new technology. In general, our proposed guidelines seek to reward those who find new technological solutions and those who risk their capital in new technology regardless of the apparent simplicity of the advance. Although exact statistical generalizations are not possible, such a policy, similar to the German and Japanese patent systems, may help restore confidence regarding this country's economic growth, provide jobs which make the difference between recession and prosperity, and provide a favorable balance of payments.

II. The Mistaken Emphasis on the "Patent Clause" Has Caused Error

Part of the problem of non-uniformity in patent cases has been their emphasis on the "Patent Clause", Art. I, Section 8, Cl. 8, of the Constitution which gives Con-

---

[7] Dale & Huntoon: Cost-Benefit Study of Patent Systems, Idea Vol. 11, No. 3, Fall 1967, pg. 351; Rines, Do We Need A Patent System, Journ. of Patent Off. Soc. Vol. 51, No. 8 Aug. 1969, pg. 501.

gress, "Power . . . To Promote the Progress of Science and Useful Arts, By Securing For Limited Times to . . . Inventors . . . The Exclusive Right To Their Discoveries." A plethora of exergesis, by this Court and others, have attempted to read *limitations* on the statute 35 USC §103 derived from the "patent clause" grant of power to Congress. For example, in *Graham* v. *John Deere Co.*, 383 U.S. 1 (1966), the first sentence reads, "After a lapse of 15 years, this court again focuses its attention on the patentability of inventions under the standard of Art. I, §8, cl. 8, of the Constitution and under the conditions prescribed by the laws of the United States."[8] At page 5, that opinion states, "The clause is both a grant of power and a limitation."

The patent statute 35 U.S.C. §103 requires that the subject matter not be "obvious." But two additional, and we maintain unnecessary, limitations have been read into 35 U.S.C. §103 from the Patent Clause, namely, (i) that the patent be to "inventors", which implies that the subject matter be an invention, and (ii) that the patent "Promote the Progress of Science and Useful Arts." The Graham case opinion, supra, at pages 5, 6, states that a standard of patentability is whether the particular patent will "promote the Progress of . . . useful Arts."

We urge an alternative support for 35 U.S.C. §103, namely, the Commerce Clause, in order to avoid the

---

[8]Also see Lee v. Runge Supr. Ct. No. 70-263, dissent on denial of Petition for Writ of Certiorari (Oct. 19, 1971) 171 USPQ 322.

limitations derived from the Patent Clause and specifically to avoid that the subject matter need be an invention or promote progress. In addition, the Commerce Clause accords with commercial reality. A basic reason, in today's society, for patents is to encourage capital investment in new technology. The inventor, most likely, is employed by some company and is not directly rewarded by the patent grant — his company is.

The Commerce Clause is a grant of power to Congress which "... acknowledges no limitations other than are prescribed in the Constitution (and) is plenary as to those subjects ...", *Gibbons* v. *Ogden*, Wheat 1 (1824). Congress grants commercial monopolies to non-inventors, such as railroads, 49 U.S.C.A. §1 (18) and 45 U.S.C.A. §501 et seq., airlines, 49 U.S.C.A. §1371, radio and television 47 U.S.C.A. 301 et seq., etc. Congress, under the Commerce Clause, can regulate production, *Wickard* v. *Fillburn*, 317 U.S. 111 (1942) and prohibit selected goods, *United States* v. *Darby*, 312 U.S. 100 (1941). That patents, at first glance, belong to the Patents Clause, should not matter, analogously, automobile thefts, *Brooks* v. *U.S.*, 267 U.S. 432 (1925); drugs *Nigro* v. *U.S.*, 276 U.S. 332 (1928) and firearms, *Sonzinsky* v. *U.S.*, 300 U.S. 506 (1937) appear to be police measures but are regulated under the Commerce Clause.

Congress, in its wisdom, may award non-inventors with patents to new technology under the Commerce Clause, as it awards radio frequencies, railroad right-of-ways, and airline routes.

The Patent Act is a statute and not a set of esoteric tablets and its words should be construed like any other statute, with the aid of a dictionary and legislative history. The dictionary says the word "obvious", used in 35 USC §103, means "... Easily discovered, seen, or understood; plain, evident; ..."[9] The present case illustrates how far some of the Courts have strayed from that "obvious" standard.

The anti-patent viewpoint of the Second Circuit, which seeks to limit the plain dictionary meaning of "obvious" in 35 USC §103, amounts to the Second Circuit reading its own economic view into the statute and the Constitution's Patent and Commerce Clauses, an approach condemned in the Holmes dissent in *Lochner* v. *New York*, 198 US 45 (1904).

III. The Prior References When Combined Do Not Work — The Second Circuit's Standard of Obviousness Needs Correcting

In Lemelson's toy gun the plunger 23' is released by the projection 21 when the trigger 16 is pulled. The spring 27 pushes the plunger 23' out of the way, permitting spring 28 S to expand the bellows 28, causing air to pass over the reed noise maker 29 and producing the ricochet sound. Figs. 1 and 2 of the patent are reproduced on page 12.

---

[9] Webster's N. Int. Dict. 2nd Ed. 1958. This dictionary meaning is *consistent* with legislative intent, which legislative history is set forth in "After Black Rock, etc.", supra note 2, at 135 et seq.

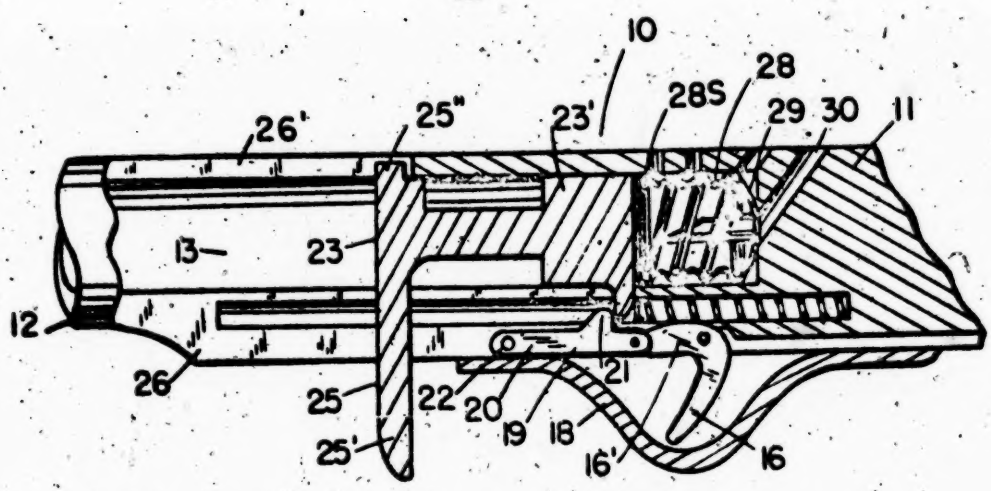

Fig. 1

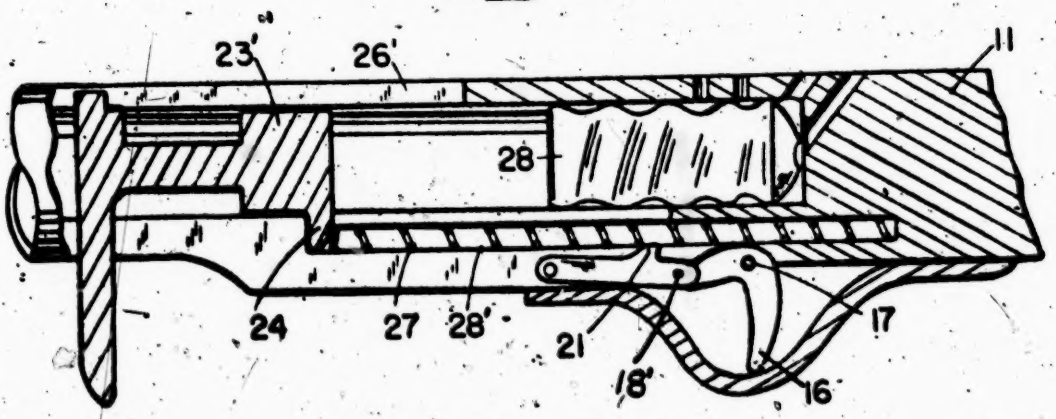

Fig. 2.

The Lawson bellows, from a jack-in-the-box, produces a sound when permitted to expand, as does Lemelson's. The Bocchino bellows produces a sound when compressed. In the Everett gun, shown on page 13, the hammer 32 is snapped forward by spring 31 when the trigger 23 is pulled. A stiff wire 56, attached to the hammer, snaps in the bellows 52 which contains talcum powder to produce a puff of powder.

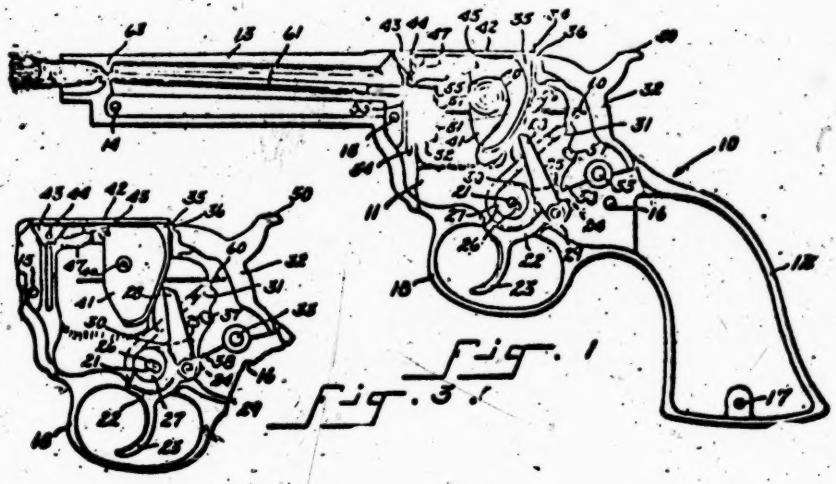

If the Lawson bellows is placed in the Everett gun it would *not* work because the sound would occur when the hammer is being cocked, i.e., before the trigger is pulled. Even young children know that a bullet makes its ricochet sound after the trigger is pulled. If the Bocchino bellows is placed in the Everett gun the reed would be destroyed and the sound would not be sustained, i.e., a ricochet sound could not be generated.

In addition to not working, the Bocchino-Everett or the Lawson-Everett combinations are not the Lemelson patent.[10] Those combinations are outside of the claim and as such, devices made with such combinations do not infringe.

The prior art applied by the Second Circuit, when combined, (i) will not work, and (ii) does not have

---

[10]Those combinations lack the means (piston) to hold the bellows compressed until the trigger is released.

all the elements of the patent claim or operate as specified in the patent. Yet they said the prior art made the patent claim "obvious".[11] This was inconsistent with the decisions of this court, such as the Calmar patent decision in *Graham* v. *John Deere Co.*, 383 U.S. 1, 35 (1966) in which the prior art pieces fitted together. And it was inconsistent with a reasonable statutory interpretation of 35 USC §103. For how can an inoperative device make a different device, which does work, obvious?

Respectfully submitted,

ELIOT S. GERBER
Attorney for Petitioner
WYATT, GERBER & SHOUP
230 Park Avenue
New York, New York 10017

[11] In contrast, the District Court said of the patent that it ". . . demonstrates such originality by using old elements in a new combination. . . Moreover, its method of operation is unique . . . This patent is also unique in the specific result it achieves".

APPENDIX A

COURT OF APPEALS DECISION

U.S. COURT OF APPEALS

For the Second Circuit

JEROME H. LEMELSON, plaintiff-appellant, v. TOPPER CORPORATION (by change of name from DeLuxe Reading Corporation), and THE GREAT ATLANTIC & PACIFIC TEA CO., INC., (defendants-appellees and cross-appellants.

Decided Oct. 22, 1971.

Before *Moore, Smith* and *Hays, Circuit Judges.*

Appeal and cross-appeal from an order of the United States District Court for the Southern District of New York, John M. Cannella, Judge, dismissing appellant's complaint of patent infringement.

Affirmed as to the dismissal of the complaint; reversed as to the finding of patent validity.

Eliot S. Gerber (Wyatt, Gerber & Shoup, and Arthur T. Fattibene of counsel) for appellant.

David H. T. Kane (Kane, Dalsimer, Kane, Sullivan and Kurucz, and Siegrun D. Kane and Gerald Levy of counsel) for appellee, Topper Corporation.

Moore, Circuit Judge — Jerome H. Lemelson appeals from an order of the United States District Court for the Southern District of New York, dismissing his complaint for patent infringement.[1] Topper Corpora-

---

[1] Lemelson v. Deluxe Reading Corp., 321 F. Supp. 1281 (S.D.N.Y. 1971).

tion[2] cross-appeals from that part of the court's order adjudging Lemelson's patent valid.

Lemelson was issued a patent on a toy gun containing a mechanism which simulates the sound of a ricocheting bullet through the use of a reed-like noisemaker which is activated by the sudden expansion of a spring-loaded bellows.[3] Sometime after the issuance of the patent, defendant Topper Corporation (Topper) began manufacturing and marketing toy guns called the "Jungle Jack" and the "Johnny Eagle Red River" which allegedly infringe appellant's patent. Co-defendant The Great Atlantic & Pacific Tea Company sells the "Jungle Jack."

After trial without a jury, the District Court concluded that Lemelson's patent was valid but not infringed by the "Jungle Jack" or "Johnny Eagle Red River" guns. While we affirm the court's dismissal of plaintiff's complaint, we do so for a different reason: we find that plaintiff's patent is invalid for obviousness.[4]

The patent law confers on patentees the exclusive right to exploit their inventions in recognition of the fact that but for legal subsidization the quantity of tech-

---

[2]Subsequent to the decision below, DeLuxe Reading Corporation changed its name to Topper Corporation.

[3]Patent No. 2,962,837 (Dec. 6, 1960).

[4]Our disposition of the issue of the patent's validity renders unnecessary disposition of appellant's claim of infringement. Accordingly, we express no opinion on the District Court's resolution of the issue of whether the doctrine of equivalents or the doctrine of file-wrapper estoppel applies to the facts of this case. See 321 F. Supp. at 127-88.

nical innovation forthcoming would be less than optimal.[5] The problem that has continually faced the Congress and the courts is how to develop legal standards that define the characteristics of those inventions and only those inventions that would not be forthcoming but for the inducement of a legal monopoly.[6] The standards currently used are that to be patentable an invention must be useful, novel, and nonobvious.[7] In Graham v. John Deere Co.,[8] the court set the guidelines to be used in applying the nonobvious standard of section 103:

"Under §103, the scope and content of the prior art are to be determined; differences between the prior art and the claims at issue are to be ascertained; and the level of ordinary skill in the pertinent are resolved. Against this background, the obviousness or non-obviousness of the subject matter is determined."[9]

---

[5]See Baxter, Legal Restrictions on Exploitation of the Patent Monopoly; An Economic Analysis, 76 Yale L. J. 267, 267-75 (1966).

[6]See Graham v. John Deere Co., 383 U. S. 1, 5-12 (1966).

[7]Patent Act of 1952, secs. 101-03, 35 U. S. C., secs. 101-03 (1971). Section 103 provides, in relevant part:

> "A patent may not be obtained through the invention is not identically disclosed or described as set forth in section 102 of this title, if the differences between the subject-matter sought to be patented and the prior art are such that the subject matter as a whole would have been obvious at the time the invention was made to a person having ordinary skill in the art to which said subject matter pertains. . . ."

[8]383 U. S. 1 (1968).

[9]Id. at 17.

LEMELSON'S INVENTION

Lemelson's invention consists of a mechanism whereby a ricochet sound is emitted upon the firing of a toy gun.[9] The essential constituents of this mechanism are (1) a bellows, (2) a spring-loaded device for compressing and holding compressed such bellows, (3) a mechanism connected to the trigger that causes the bellows to suddenly expand upon firing, and (4) a noise making device consisting primarily of a reed. When the gun is cocked, an actuator compresses the bellows. Upon firing, the bellows rapidly expands,

[9]Claim 2 of Lemelson's patent provides:

> "In the mechanical combination of a manually portable toy gun consisting of a shaped hand grip portion, a barrel portion, a trigger element for simulating the firing of a gun and a sound producing mechanism located within the gun, the improvement which comprises:
>
> "(a) a collapsible bellows device,
>
> "(b) a spring loaded bellows compressing means for compressing said bellows and temporarily holding the bellows is a substantially collapsed condition,
>
> "(c) means associated with said trigger element for releasing said spring loaded bellows compressing means and thereby causing the collapsed bellows to suddenly expand,
>
> "(d) said collapsible bellows device being provided with a noise making device which is actuated when said bellows moves from a compressed to an expanded position,
>
> "(e) whereby when said collapsible bellows is compressed under the action of said bellows compressing means and then subsequently the trigger element is caused to release said bellows compressing means, said collapsed bellows will suddenly expand and emit a sound which children can imagine and associate with the sound of a ricochetting bullet."

It is this claim that appellant contends is infringed by Topper's guns.

sucking in air that flows over the tubular reed type noisemaker. The end result is that the bellows upon expansion emits a sound that simulates the whine of a bullet ricocheting in flight.

The District Court considered fourteen patents as constituting the prior art.[11] In making our finding of obviousness we rely on three of these: the Bocchino, Lawson and Everett patents.[12] The Bocchino patent consists of a toy bellows with an expansion spring, intended to be used in connection with wind operated reeds in the production of sound.[13] The Lawson patent is a jack-in-the-box containing a spring actuated bellows with a reed that produces a sound upon expansion of the bellows when the top of the box is released.[14] The Everett patent is a toy smoking gun, containing a bellows which is expanded upon the cocking of the hammer and collapses upon firing. The contraction of the bellows forces a small amount of powder to escape, thereby creating the illusion of a smoking weapon.[15] The Lawson patent was cited by the Patent Office as exemplifying the prior art; the Bocchino and Everett patents were not cited by the office.

THE OBVIOUSNESS OF THE LEMELSON INVENTION

Mindful of the corrosive effect that time has on the

---

[11]See 321 F. Supp. at 1283-84. The Patent Office cited three patents, two of which the District Court included in its survey of the prior art. Id., at 1284.

[12]Patent Nos. 1,769,251 (July 1, 1930), 2,598,807 (Oct. 29, 1948), 2,561,849 (July 24, 1951).

[13]Patent No. 1,769,251 (July 1, 1930).

[14]See 321 F. Supp. at 1284.

[15]Patent No. 2,561,849 (July 24, 1951).

non-obviousness of an invention, we nevertheless conclude that "the differences between the subject matter sought to be patented and the prior art are such that the subject matter as a whole would have been obvious at the time the invention was made to a person having ordinary skill in the art. . . ."[16] In short, a person skilled in the mechanical arts and who desired to produce a gun which would emit a ricochetting sound could have found in the prior art ways, means or suggestions as to how to do it. The use of a spring actuated, expanding bellows in conjunction with wind operated reeds to create sound was disclosed by the Bocchino and Lawson patents. The use of a trigger mechanism to actuate a bellows was suggested by the Everett patent. Lemelson's contribution was to devise a mechanism whereby a bellows is first contracted and then rapidly expanded to create the rush of air that, flowing over the tubular reed-type noisemaker, produced the ricochet sound. Even disregarding the stricter standard of non-obviousness applicable to combination patents,[17] we conclude that the invention of such a mechanism would have been obvious to someone having ordinary skill in the art of making toys.

The question of patent validity is a question of law;[18]

---

[16] Patent Act of 1952, sec. 103, 35 U. S. C., sec. 103 (1971).

[17] See Great Atlantic & Pacific Tea Co. v. Supermarket Equipment Corp., 340 U. S. 147, 152-53 (1950); Continental Can Co. v. Old Dominion Box Co., 393 F. 2d 321, 326 (2d Cir., 1968).

[18] Graham v. John Deere Co., 383 U. S. 1, 17 (1966); Great Atlantic & Pacific Tea Co. v. Supermarket Equipment Corp., 340 U. S. 147, 155 (1950) (concurring opinion); Gross v. JFD Manufacturing Co., 314 F. 2d 196, 198 (2d Cir.), cert. denied 374 U. S. 832 (1963).

District Court determinations of validity are not entitled to the weight on appeal accorded District Court findings of fact.[19] Our disagreement with the court below on the issue of validity stems from our conclusion that that court did not apply the rather rigorous standard of nonobviousness mandated by section 103, Graham[20] and Great Atlantic & Pacific.[21] There may have been novelty in the creation of Lemelson's gun, but novelty is not to be equated with nonobviousness.[22] The fact that the elements of various segments of the prior art had not been previously combined to produce a ricochetting sound does not mean that a person skilled in the toy-making art created a patentable invention by his combination.

We recognize that there is a presumption, which is rebuttable, in favor of the Lemelson patent, and that the burden of establishing the invalidity of the patent is on Topper.[23] However, it has long been recognized

[19]See Fed. R. Civ. P. 52(a).

[20]See 383 U. S., at 17-19.

[21]See 340 U. S. at 151-53, and concurring opinion of Justice Douglas;

[22]But see:

> "While the ordinary skill in the art at that time clearly was quite high, it is important to note that no one in the art had invented a gun that simulated the sound of a ricochetting bullet by the sudden expansion of a spring-loaded bellows prior to the time of plaintiff's invention. . . . The Plaintiff's patent demonstrates such originality by using the old elements in a particular combination previously unknown to the prior art. The invention combines for the first time a spring actuated bellows, a reed-like noisemaker, a compressing system, and a trigger mechanism." 321 F. Supp. at 1284-85 (footnote omitted). Cf. Graham v. John Deere Co., 383 U. S. 1, 14-15 (1966).

[23]Patent Act of 1952, sec. 282, 35 U. S. C., sec. 282 (1971).

that "the most that can be said of the presumption is that it requires that reasonable doubt on the question of validity be resolved in favor of the patent holder."[24] Such a doubt we do not have. Moreover, the volume of patent applications processed by the Patent Office, and the ex parte nature of their proceedings undermine the weight of the statutory presumption.[25] Finally, the failure of the Patent Office to actually cite patents that comprise, in part, the prior art further undercuts the weight of the presumption.[26]

As a further ground for upholding the validity of Lemelson's patent, the District Court relied on United States v. Adams[27] in finding that the Lemelson invention overcame disadvantages in the prior art that discouraged the search for the ricochet sound mech-

[24] Lorenz v. F. W. Woolworth Co., 305 F. 2d 102, 105 (2d Cir., 1962); Rains v. Niaqua, Inc., 406 F. 2d 275, 278 (2d Cir.), cert. denied 395 U. S. 909 (1969).

[25] See Graham v. John Deere Co., 383 U. S. 1, 18-19 (1966); Lorenz v. F. W. Woolworth Co., 305 F. 2d 102, 105 (2d Cir., 1962).

[26] See, e. g., Reeves Brothers, Inc., v. U. S. Laminating Corp., 417 F. 2d 869, 872 (2d Cir., 1969); Continental Can Co. v. Old Dominion Box Co., 393 F. 2d 321, 326, n. 8 (2d Cir., 1968); Formal Fashions, Inc., v. Braiman Bows, Inc., 369 F. 2d 536, 539 (2d Cir., 1966). It is true that there is testimony in the instant case that the Patent Office must have considered the Everett and Bocchino patents, since these patents were in the classes that the examiner did search. Transcript at 277-80. In a close case we would not ignore the statutory presumption of validity solely on the basis that the examiner considered but did not cite the relevant prior art. However, where there is substantial evidence to rebut the statutory presumption, as in the instant case, the failure of the examiner to actually cite the relevant prior art. However, where there is substantial evidence to rebut statutory presumption, as in the instant case, the failure of the examiner to actually cite the relevant prior art does have cumulative value.

[27] 383 U. S. 39 (1966).

anism.[28] We believe this reliance was misplaced. The Christopher patent simulates the sound of a ricocheting bullet either by a sound-amplifier mounted near a recording disc and needle or by a lug or a revolving disc which strikes a sound-making comb and then a tuning fork.[29] There is no indication whatsoever as to how this patent established factors known to those skilled in the art that would deter the conception of the invention at issue here. In Adams such deterring factors were substantial and were well known to those skilled in the art.[30] In the absence of such evidence,

---

[28] 321 F. Supp. at 1285. In Adams the court found nonobvious the invention of a nonrechargeable electrical battery. The battery operated on an open circuit, became heated in normal use, and was water activated. In finding the invention nonobvious, the court relied upon, inter alia, the following two factors: (1) a person reasonably skilled in the art would have believed that a battery which continued to operate on an open circuit and which heated in normal use was not practical [Adams' battery was practical]; and (2) a person reasonably skilled in the art would have believed that water-activated batteries were successful only when combined with non-magnesium electrolytes [one of the electrolytes in Adams' battery contained magnesium]. 383 U. S. at 51-52. See also Shaw v. E. B. & A. C. Whiting Co., 417 F. 2d 1097, 1104 (2d Cir., 1969), cert. denied 397 U. S. 1076 (1970) (Justices Black, Douglas and White, dissenting).

[29] Patent No. 2,734,310 (Feb. 14, 1956).

[30] See note 28, supra.

> "These *long-accepted factors* [the factors referred to in note 28], when taken together, would, we believe, deter any investigation into such a combination as is used by Adams. This is not to say that one who merely finds new uses for old inventions by shutting his eyes to their prior disadvantages thereby discovers a patentable innovation. We do say, however, that *known disadvantages in old devices which would naturally discourage the search for new inventions* may be taken into account in determining obviousness."
>
> 383 U. S. at 52 (emphasis added).

reliance on the Adams path through the nonobvious test must fail.

Judgment dismissing the complaint is affirmed; the finding of patent validity is reversed.

APPENDIX B

DISTRICT COURT DECISION

UNITED STATES DISTRICT COURT
SOUTHERN DISTRICT OF NEW YORK

JEROME H. LEMELSON,

Plaintiff,

against

63 Civ. 3663

DELUXE READING CORPORATION and THE GREAT ATLANTIC AND PACIFIC TEA CO., INC.,

Defendants.

Appearances:

Joseph D. Lazar and Arthur T. Fattibene,
New York City, for plaintiff.
Kane, Dalsimer, Kane, Sullivan & Kurvez,
by David H. T. Kane and Gerald Levy,
for defendants.

CANNELLA, J.

Action for infringement of a patent on a toy gun, brought under the Patent Act of 1952, 35 U.S.C. §1 *et seq.*, is dismissed.

The court finds that on December 6, 1960 the plaintiff was issued a patent on a toy gun containing a ricochet noise mechanism, United States Letters Patent, No. 2,962,837. This mechanism simulates the sound of a ricocheting bullet through use of a reed-like noisemaker which is activated by the sudden expansion of a spring-loaded bellows.[1] Following issuance of the patent, the defendant De Luxe Reading Corporation [hereinafter "DeLuxe"] manufactured and marketed within this District toy guns called the "Jungle Jack" and the "Johnny Eagle Red River" which allegedly infringe plaintiff's patent. The co-defendant The Great Atlantic and Pacific Tea Company hereinafter "A & P" sold the "Jungle Jack" within this District.[2]

The court has jurisdiction pursuant to 28 U.S.C. §§1338, 1400.

The defendants contend that the patent is neither valid nor infringed by their guns. In attempting to overcome the statutory presumption in favor of a patent's validity,[3] they argue that plaintiff's patent is

---

[1]See Plaintiff's Exhibit 1, a copy of figures 1 and 2 of which is appended to this opinion.

[2]See Defendants' Answer, p.2.

[3]See 35 U.S.C. §282. The defendants allege that this presumption is undercut severely by the Patent Office's failure to consider "significant prior art" and by misrepresentations of the plaintiff to the Patent Office. However, the significance of the "prior art" submitted by the defendants is dubious. Moreover, the Patent Office did search in the appropriate categories prior to issuing the patent and cited the prior patents which it considered significant. See Plaintiff's Exhibit 9, p.73; Trial Minutes, p.277.

The alleged misrepresentations by the plaintiff are his statement that nothing would happen when a bellows noise-

invalid for lack of novelty under 35 U.S.C. §102, for obviousness under 35 U.S.C. §103, and for failure to make an adequate disclosure under 35 U.S.C. §112.

VALIDITY

The court finds that while plaintiff's patent does contain a combination of elements known in the prior art — *e.g.*, a bellows, a spring, a reed-like noisemaker, a trigger mechanism — nowhere in the prior art is the patent "identically disclosed." See Ling-Temco-Vought, Inc. v. Kollsman Instrument Corp., 372 F.2d 263, 267 (2d Cir. 1967). The plaintiff's patent is therefore not invalid for lack of novelty. The "fact that each element of a creation ... is found in the prior art does not negate novelty if the old elements are combined in such a way that as a result of the combining an improved, useful, and more advantageous innovation is obtained." Shaw, v. E.B. & A.C. Whiting Co., 417 F.2d 1097, 1101 (2d Cir. 1969).

Section 103 of Title 35, U.S.C. provides that a patent may not be obtained "if the differences between the subject matter sought to be patented and the prior

---

maker from a certain Lawson patent is substituted for the siren of a certain Rotfeld patent and the further statement that the prior art contained no ricochet sounding patents. However, a review of the entire record has not persuaded the court that there is any basis for the contention that the plaintiff made these statements with knowledge of their falsity or that the Patent Office relied upon them. See Plaintiff's Exhibit 9, pp. 47, 73. See generally Walker Process Equipment, Inc. v. Food Mach. & Chem. Corp., 382 U.S. 172 (1965); Precision Instrument Mfg. Co. v. Automotive Maintenance Mach. Co., 324 U.S. 806 (1945).

art are such that the subject matter as a whole would have been obvious at the time the invention was made to a person having ordinary skill in the art to which said subject matter pertains." Therefore, the court is obliged to determine the scope and content of the prior art, differences between the prior art and the claims at issue, and the level of ordinary skill in the pertinent art. Graham v. John Deere Co., 383 U.S. 1, 17 (1966).

The prior art primarily relied upon by the defendant[4] consists of the following patents:

PATENTEE	*PATENT NO.*	*DATE FILED*
Briggs	387,761	Aug. 14, 1888
Pickl	1,188,315	June 20, 1916
Willett	1,205,496	Nov. 21, 1916
Parsons	1,582,778	April 27, 1926
Bocchino	1,769,251	July 1, 1930
Mueller	1,880,354	Oct. 4, 1932
Crisler	2,418,399	April 1, 1947
Wolf	2,459,300	Jan. 18, 1949
Hjelm	2,527,254	Oct. 24, 1950
Singer	2,534,996	Dec. 19, 1950
Everett	2,561,849	July 24, 1951
Christopher	2,734,310	Feb. 14, 1956

The Briggs patent is a toy gun adapted both for spinning a top and shooting a ball. The barrel of this gun contains a rod which causes a top on the upper portion of the gun to spin when the rod is released by a detent, trigger and spring. The Pickl patent is a toy gun with

[4] See Defendants' Exhibit K.

a barrel that contains a leaf spring which is actuated by a trigger; thus allowing the free end of the spring to strike a drum and produce the simulated sharp report of a pistol. The Willett patent is a toy gun with a steel-sounding plate which emits a single sharp report or similar successive or ricochet sounds when it is hit by a hammer actuated by a trigger and cam.

The next three patents on the above list are not toy guns. The Parsons patent is a toy doll containing a spring enclosed bellows which makes a crying sound when actuated by a bell crank lever and a suction cup. The Bocchino patent is simply a toy bellows containing a wind operated reed. The Mueller patent shows a fluid gun (not a toy) in which liquid is ejected from a bellows by means of a construction plunger, which is placed in motion through release of a compressed spring by a trigger.

The six remaining patents cited by the defendants are toy guns. The Crisler patent uses a trigger mechanism in a rifle to release a hammer spring, allowing a striker to hit a sounding anvil to produce a simulated sharp report. The Wolf patent provides two suction cups which are pulled apart by a lever connected to the trigger, thus causing a report. The Hjelm patent involves a spring which is released by the trigger to discharge a projectile. The Singer patent has a deflatable rubber handle which is squeezed to produce whistle sounds. The Everett "toy smoking gun" contains a bellows, one end of which is linked to the hammer by a rigid member. Cocking the hammer expands the bellows and snapping the hammer collapses it, al-

lowing a small amount of powder to escape, thereby creating the illusion of a smoking weapon. The Christopher patent simulates the sound of a ricocheting bullet either by a sound amplifier mounted near a recording disc and needle or by a lug on a revolving disc which strikes a sound making comb and then a tuning fork.

In addition to this prior art, two patents were cited by the Patent Office as best exemplifying the prior art. A Rotfeld patent, No. 2,648,159, filed Feb. 7, 1952, is a toy siren and chromatic gun. It consists of a spring actuated piston attached to one end of a rod located in the gun's barrel which is pulled back manually using a knob attached to the other end of the rod. After the rod has compressed the spring, a locking flange adjacent to the piston engages part of the trigger mechanism to hold the spring compressed. When the trigger is pulled, the rod is released and the compressed air that results escapes through a siren located at the muzzle end of the barrel, causing a wailing noise. A Lawson patent, No. 2,598,807, filed Oct. 29, 1948, is a jack-in-the-box containing a spring actuated bellows with a reed which produces a sound upon expansion of the bellows when the top of the box is released.

After carefully considering all of the above patents, this court is not persuaded that plaintiff's patent would have been obvious at the time of the invention to a person having ordinary skill in the art.[8] While the or-

---

[8]See Trial Minutes, pp.225-29. The cases cited by the defendants in which combination patents were held to be invalid for obviousness do not support their contention of obviousness here-

dinary skill in the art at that time clearly was quite high, it is important to note that no one in the art had invented a gun that simulated the sound of a ricocheting bullet by the sudden expansion of a spring-loaded bellows prior to the time of plaintiff's invention. In this regard, it is imperative that courts not fall into the trap of combining elements from a wide range of prior art to conclude, by the use of infallible hindsight, that a patent is obvious where persons skilled in the art have failed to combine these elements to produce such a result. See Dempster Bros. V. Buffalo Metal Container Corp., 352 F.2d 420, 422 (2d Cir. 1965), cert. denied, 384 U.S. 940 (1966); Reiner v. I. Leon Co., 285 F.2d 501, 503-04 (2d Cir. 1960) cert. denied, 366 U.S. 929 (1961). A patent is obvious when the old elements as they are combined perform no new, different, or additional function or operation than they theretofore had performed. Anderson's-Black Rock, Inc. v. Pavement Salvage Co., 396 U.S. 57 (1969); A & P Tea Co. v. Supermarket Corp., 340 U.S. 147, 151-52 (1950). Judge Hand has pointed out that "[a]ll machines are made up of the same elements, ... But the elements are capable of an infinity of permutations, and the selection of that group which proves serviceable to a given need may require a high degree of originality. It is that act of selection which is the invention." B.G. Corp.

---

in. See, e.g.: Dow Chemical Co., 324 U.S. 320 (1945) (use of diluted as opposed to concentrated hydrochloric acid in oil drilling); A & P Tea Co. v. Supermarket Equipment Corp., 340 U.S. 147 (1950) (extending a counter and mobile frame used in grocery stores); Formal Fashions, Inc. v. Braiman Bows, Inc., 369 F.2d 536 (2d Cir. 1966) (a cumberbund that fits all); Continental Can Co. v. Old Dominion Box Co., 393 F.2d 321 (2d Cir. 1968) (using a locking action on an open-end wrap-around carton as well as on folding cartons).

v. Walter Kidde & Co., 79 F.2d 20, 22 (2d Cir. 1935). The plaintiff's patent demonstrates such originality by using the old elements in a particular combination previously unknown to the prior art.[6] The invention combines for the first time a spring actuated bellows, a reed-like noisemaker, a compressing system, and a trigger mechanism. Moreover, its method of operation is unique.[7] An actuator compresses a spring-loaded bellows until a projection on the actuator engages a projection on the trigger element. The bellows expands after these projections are disengagd by a pulling of the trigger.[8] This patent is also unique in the specific result it achieves.[9] The rapidly expanding bellows simulates the sound of a ricocheting bullet. In the relevant art prior to plaintiff's patent, the only elements used for simulating a ricochet sound were a tuning fork, a disc recording, and a sounding plate. The court finds that these devices contain disadvantages which would naturally tend to discourage the search for new mechanisms to produce the same effect[10] and that plaintiff's patent is not valid for obviousness.[11]

---

[6] See, e.g., Shaw v. E.B. & A.C. Whiting Co., 417 F.2d 1097, 1104-05 (2d Cir. 1969).

[7] See, e.g., Electric Pipe Line, Inc. v. Fluid System, Inc., 132 F. Supp. 123, 127 (D. Conn. 1955), aff'd, 231 F.2d 370 (2d Cir. 1956).

[8] See Plaintiff's Exhibit 1 and the Appendix hereto.

[9] See, e.g., Technical Tape Corp. v. Minnesota Mining & Mfg. Co., 247 F.2d 343 (2d Cir. 1957), cert. denied, 355 U.S. 952 (1958).

[10] See United States v. Adams, 383 U.S. 39, 52 (1966).

[11] The court finds it unnecessary to go into secondary considerations. See Graham v. John Deere Co., 383 U.S. 1, 17-18 (1966); Scott Paper Co. v. Fort Howard Paper Co., 432 F.2d 1198, 1204 (7th Cir. 1970); Preuss v. General Electric Co., 393 F.2d 29, 33 (2d Cir.), cert. denied, 393 U.S. 834 (1968).

The defendants also urge that plaintiff's patent is invalid on the grounds of failure to make an adequate disclosure to the Patent Office of the construction of the bellows.[12] However, while the Patent Office cited many errors in the plaintiff's original patent application, it did not question the description of the bellows.[13] Moreover, the description of the bellows in plaintiff's patent is just as precise as the description given in prior patents.[14] In any event, the fact that several bellows would have to be tried by persons skilled in the art in order to reach the desired sound does not invalidate the patent. Cf. Reeves Bros., Inc. v. U.S. Laminating Corp., 282 F.Supp. 118, 123 (S.D.N.Y. 1968) aff'd, 417 F.2d 869 (2d Cir. 1969). The court therefore finds that the plaintiff's disclosure complies with 35 U.S.C. §112 and that his patent is valid.

INFRINGEMENT

The plaintiff alleges that DeLuxe infringes Claims 1 and 2 of his patent by manufacturing and selling the Johnny Eagle Red River gun, and infringes Claim 2 by manufacturing and selling the Jungle Jack Ricochet Sounding gun. In addition, the plaintiff alleges that the A & P infringes Claim 2 of his patent by selling the Jungle Jack gun.

---

[12] Section 112 of Title 35, U.S.C. provides that the "specification shall contain a written description of the invention . . . in such full, clear, and exact terms as to enable any person skilled in the art to which it pertains . . . to make and use the same. . . ."

[13] See Plaintiff's Exhibit 9, pp.42-43.

[14] See the Everett, Parsons and Mueller patents in Defendant's Exhibit.

Claim 2 of plaintiff's patent describes the invention as follows:

> 2. In the mechanical combination of a manually portable toy gun consisting essentially of a shaped hand grip portion, a barrel portion, a trigger element for simulating the firing of a gun and a sound producing mechanism located within the gun, the improvement which comprises:
>
> (a) a collapsible bellows device,
> (b) a spring loaded bellows compressing means for compressing said bellows and temporarily holding the bellows in a substantially collapsed condition,
> (c) means associated with said trigger element for releasing said spring loaded compressing means and thereby causing the collapsed bellows to suddenly expand,
> (d) said collapsible bellows device being provided with a noise making device which is actuated when said bellows moves from a compressed to an expanded position
> (e) whereby when said collapsible bellows is compressed under the action of said bellows compressing means and then subsequently the trigger element is caused to release said bellows compressing means, said collapsed bellows will suddenly expand and emit a sound which children can imagine and associate with the sound of a ricochetting bullet.

Claim 1 differs from Claim 2 by describing the collapsible bellows as being at one end of the barrel and the bellows compressing means at least partially within the barrel. It also differs in that the bellows is temporarily locked (not temporarily held) in a substantially collapsed condition.

The court finds that the Johnny Eagle gun does not follow the exact specifications in Claim 1. The Johnny Eagle places its bellows in the stock of the gun, completely separated from the barrel by the trigger mechanism. Furthermore, the linkage of the compressing mechanism of the Johnny Eagle gun is adjacent to the barrel and not partially within it.

The court further finds that neither Jungle Jack nor Johnny Eagle fall within the precise description of Claim 2 since they do not employ the compressing or the trigger mechanism used in plaintiff's patent. As shown in the Appendix, the compressing mechanism consists of an actuator (23), a spring (27), a projection (21) of arm (19) and projection (24) of the actuator. The actuator compresses the bellows by sliding from the expanded position (Fig. 2) to the compressed position (Fig. 1). The projection (24) on the lower end of the right face of the actuator engages the projection (21) on the arm of the trigger mechanism to lock the bellows in a compressed position. The trigger mechanism employs a trigger which pivots on pins (17 and 18) when it is squeezed, thus disengaging projection (21) from projection (29) and thereby allowing the compressed spring (27) to expand and move the ac-

fwater forward. This permits the bellows to expand rapidly.

The Jungle Jack gun differs significantly from this patent in both structure and mode of operation. This gun has a combined compressing and trigger mechanism composed of a lever, lever torsion spring, hammer, trigger, and hammer torsion spring. When the trigger is pulled, the upper portion of the trigger engages the hammer, pushing the hammer upwards, which in turn rotates the front end of a lever down onto the bellows and compresses it. As the trigger is squeezed further (there is no locking action as in the patent), the hammer releases the back end of the lever, allowing the bellows to expand and produce a ricochet sound.[15]

The Johnny Eagle gun also differs extensively from plaintiff's patent in structure and operation. It contains a complicated combination compressing and trigger mechanism consisting of lever, hammer, bell crank, trigger, thumb hammer, thumb hammer torsion spring, hammer torsion spring, slide, and cocking lever. The gun may be operated in three different ways — by cocking it with the cocking lever, or with the thumb hammer, and pulling the trigger or by pulling the trigger without cocking it first. When the cocking lever is pushed down, a slide travels back over the thumb hammer, thereby causing it to rotate backwards. This rotation causes the trigger to move partially to the rear and a projection on the hammer to engage a projection on the trigger, thus locking both

---

[15]See Trial Minutes, p.139.

in place.[16] The rearward movement of the trigger engages a series of linkages[17] (bell crank, hammer, and lever) which partially depress the bellows. When the trigger is pulled, the bellows is depressed further and then released by action within the bell crank. If the trigger is pulled without cocking, the above-mentioned operation occurs in one continuous action, without any intermediate locking.

In view of the foregoing, the court finds that the compressing and trigger mechanisms of the Jungle Jack and Johnny Eagle guns differ significantly in their component parts and mode of operation from those in plaintiff's patent.

Despite these differences the plaintiff contends that infringement may be found by applying the doctrine of equivalents. Under this doctrine, infringement results when one device does the same work in substantially the same way and accomplishes substantially the same result as another, although they may differ in name, form or shape. See Machine Co. v. Murphy, 97 U.S. 120, 125 (1878). The court concludes, however, that the applicable doctrine in this case is not the one of equivalents, but rather that of file wrapper estoppel which precludes a patentee from asserting his initial claims or their equivalents when those claims were rejected by the Patent Office and, as a result, were subsequently narrowed in order to secure acceptance.

---

[16]The thumb hammer also may be cocked by pulling back on it until it engages with the trigger.

[17]These linkages are very similar to those in the Jungle Jack gun.

See Exhibit Supply Co. v. Ace Patents Corp., 315 U.S. 126, 136 (1942).

A brief review of the file wrapper history indicates the applicability of estoppel in this case. On November 13, 1953, the plaintiff filed an original application for a patent. This application contained two broad claims for a toy gun.[18] On August 21, 1959, the Patent Office examiner rejected both claims on the basis of inadequate disclosure of the sound required to simulate a ricocheting bullet and on the prior disclosures of the art.[19] To overcome these objections, the plaintiff

---

[18]Plaintiff's original application contained 26 claims, which he later restricted to two claims — 5 and 6. These claims read as follows:

> 5. A toy gun having a sound producing mechanism simulating the noise of a bullet richocetting in flight comprising a toy gun shaped with a barrel, hand grip, or stock, and trigger release mechanism, a collapsable (sic) bellows comprising a flexible tubular section, a spring therein normally keeping said bellows expanded, a noisemaker situated at one end of said bellows, said noisemaker adapted to emit a high shrill note simulating the sound of a richocetting bullet with the rapid movement of said bellows walls, means compressing said bellows and means associated with said trigger permitting said bellows to expand freely under the action of said spring therein. 6. A toy gun having a barrel and stock, means therein producing a high pitch noise simulating a bullet richocetting in flight, said means comprising a collapsable (sic) bellows, one end of said bellows being secured to the interior of said toy, an opening in said bellows permitting air to flow therethru (sic) with the movement thereof, an air operated noisemaking device in said opening, and spring actuated means urging movement of the non-secured end of said bellows with the movement of said trigger with sufficient rapidity to cause air to rush thru said opening to produce said richochetting noise. Plaintiff's Exhibit 9, p.23.

[19]See Plaintiff's Exhibit 9, pp.42-43.

withdrew Claims 5 and 6 on February 23, 1960 and substituted Claim 28 (Claim 1 of the present patent). On May 26, 1960, he added by amendment Claim 29 (Claim 2 of the present patent). In July, 1960, the examiner found these two new claims allowable.

It is significant that the two claims thus allowed are considerably narrower in scope than those originally presented and rejected. In Claim 28, the plaintiff for the first time placed the bellows and compressing mechanism in particular locations. In Claims 28 and 29, he also narrowed the scope of his invention by using the compressing means to lock the bellows in a substantially collapsed condition. It appears that the plaintiff narrowed his claim in order to meet the examiner's objections as to prior art, i.e., to remove the ambiguity as to the placement, composition, and or operation of the compressing mechanism.[20] Hence, the plaintiff is bound by the terms he used in his claims and specifications to avoid the state of the prior art. See Schriber-Schroth Co. v. Cleveland Trust Co., 311 U.S. 211, 221 (1940). Although the plaintiff had the right to appeal the examiner's rejection of his original claims,[21] he chose instead to accept a patent with narrower and more restricted claims. It is not appropriate either to speculate as to his reasons for doing so or to relieve

---

[20] The court notes the high degree of similarity between the operation of the toy gun in plaintiff's original patent application and the operation of the Rotfeld gun, which the examiner cited as part of his reason for rejection of the original application. See Plaintiff's Exhibit 9, p. 43; Rotfeld patent, Defendants' Exhibit K.

[21] See 35 U.S.C. §§141, 145; Keith v. Charles E. Hires Co., 116 F.2d 46 (2d Cir. 1940).

him from the consequences thereof.[22] See Int'l Latex Corp. v. Warner Bros. Co., 276 F.2d 557, 565 (2d Cir.), cert. denied, 364 U.S. 816 (1960). The court therefore concludes that the defendants have not infringed plaintiff's patent.

In summarizing this opinion which represents the court's findings of fact and conclusions of law pursuant to Rule 52 of the Federal Rules of Civil Procedure, the court concludes that plaintiff's patent is valid, but that it has not, and is not being infringed by the defendants.[23] The summons and complaint are therefore hereby dismissed.

So ordered:

Dated: New York, N.Y.

January 14, 1971.

U.S.D.J.

---

[22] "[I]f the claim to a combination be restricted to specified elements, all must be regarded as material, and . . . limitations imposed by the inventor, especially such as were introduced into an application after it had been persistently rejected, must be strictly construed against the inventor and looked upon as disclaimers." I.T.S. Rubber Co. v. Essex Rubber Co., 272 U.S. 429, 443-44 (1926). See also Stefner Lighting, Inc. v. Allied Electrical Supply, Inc., 431 F.2d 539, 544 (5th Cir. 1970), petition for cert. filed, 39 U.S.L.W. 3201 (U.S. Nov. 2, 1970).

[23] The defendants have requested an award of partial attorney's fees. Attorney's fees may be awarded only in exceptional circumstances 35 U.S.C. §285. And such an award generally is based upon a finding of bad faith on the part of the losing party. See Formal Fashions, Inc. v. Braiman Bows, Inc. 254 F.Supp. 389 (S.D.N.Y. 1966), aff'd, 369 F.2d 536 (2d Cir. 1966). See also Fleischman Distilling Corp. v. Maier Brewing Co., 386 U.S. 714, 717-18 (1967). The court finds no such bad faith here.

APPENDIX

Dec. 6, 1960 J. H. LEMELSON 2,962,837

TOY GUN CONTAINING RICOCHET NOISE MECHANISM

Original Filed Nov. 13, 1953

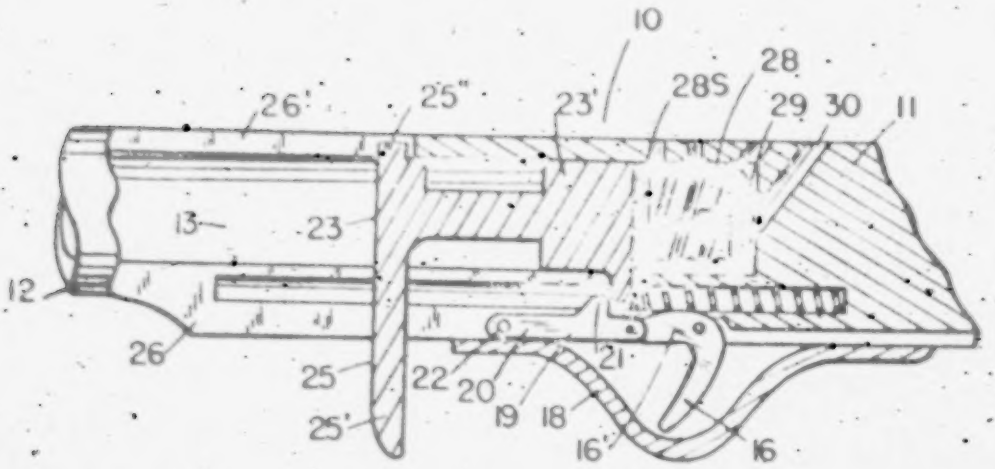

Fig. 1

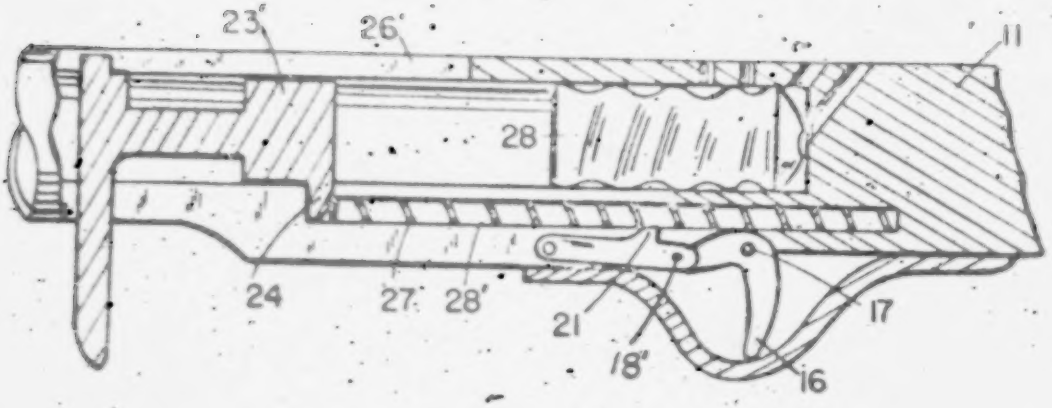

Fig. 2

INVENTOR
Jerome H. Lemelson

APPENDIX C

SOME NOTES TOWARD MORE DEFINITE GUIDELINES AS TO OBVIOUSNESS OF PATENT CLAIMS UNDER 35 U.S.C. 103

1. A claim for a combination of old elements, steps or ingredients shall be subject to the same standard of obviousness as any other claim. See *Reiner v. I. Leon Co.*, 285 F.2d 501 (2 Cir. 1960) contra *Jeddeloh Brothers Sweed Mills, Inc. v. Coe Mfg. Co.*, 375 F.2d 85, 89 (9th Cir. 1966).

2. The decision as to obviousness shall not be determined by the fact that the subject matter involves the addition or change of only a single element, step or ingredient to or in an old combination. See *The Barbed Wire Patent* 143 U.S. 275, 282 (1892); contra *Greenaway Nursery Co. v. J and R Tool and Mfg. Co.*, 252 F.S. 113 (D.C. Iowa 1966), aff'd 376 F.2d 738 (8th Cir. 1967).

3. The question of obviousness shall not be determined on the basis that the subject matter is not revolutionary, basic, scientific or technical in character. See Rich, "The Principles of Patentability", Journ. of the Patent Off. Soc. Feb. 1962, Vol. 42, No. 2, pg. 75 at 85; contra *Trimble Products Inc. v. W. T. Grant Co.*, 283 F.S. 707 (DC SD NY 1968).

4. The question of obviousness shall not be influenced by the failure of an inventor, acting in good faith, to appreciate or set forth in his patent any or

all of the advantages or functions or uses of the subject matter or the correct or any theory related thereto. *Diamond Rubber Co. v. Consolidated Rubber Tire Co.*, 220 U.S. 428, 435 (1911); contra *Crosby Teletronics Corp. v. General Electric Co., Inc.*, 392 F. 2d 29 (1968).

5. Primary considerations indicating that a patent claim is not obvious are (i) that the need for the subject matter existed for a long period of time, (ii) the failure of others to achieve the same result, particularly after they had the patented subject matter in hand, (iii) the commercial success, either in terms of sales or in cost reductions, resulting from the subject matter itself, as distinct from promotion, (iv) the achievement of the beneficial result by going contrary to the opinions of experts or opinions long held in the patent field.

6. The relative simplicity of the subject matter is evidence of non-obviousness. *Diamond Rubber Co. v. Consolidated Rubber Tire Co.*, 220 US 428 (1910) contra *Skee-Trainer, Inc. v. Garelick Mfg. Co.*, 361 F.2d 895 (8th Cir. 1966).

7. A change of material, a change of form, or an analogous new use are generally obvious. *Hotchkiss v. Greenwood*, 11 How. 248 (1951).

APPENDIX D

Percentages of Patents Found Valid by United States Circuit Courts Reported In the United States Patent Quarterly from the time of the Supreme Court Decision in *Graham et al v. John Deere Co. of Kansas City et. al.* 383 U.S. 1 (Decided February 21, 1966) through the December 20, 1971 *Issue of the United States Patents Quarterly*

CIRCUIT	*VALID*		*VALID & INFRINGED*	
1	30%	3/10	10%	1/10
2	25%	8/32	18%	6/32
3	25%	5/20	25%	5/20
4	11%	3/27	7%	2/27
5	46%	18/39	38%	15/39
6	40%	9/22	27%	6/22
7	47%	38/80	40%	32/80
8	4%	1/21	4%	1/21
9	15%	10/63	7%	5/63
10	12%	1/ 8	12%	1/ 8
D.C.	16%	1 /6	16%	1/ 6

IN THE
SUPREME COURT OF THE UNITED STATES

October Term, 1971

No. 71-945

JEROME H. LEMELSON,

Petitioner,

versus

TOPPER CORPORATION and THE GREAT ATLANTIC & PACIFIC TEA CO., INC.,

Respondents.

ON PETITION FOR A WRIT OF CERTIORARI TO THE UNITED STATES COURT OF APPEALS FOR THE SECOND CIRCUIT

BRIEF FOR RESPONDENTS IN OPPOSITION

David H. T. Kane
Attorney for Respondents
420 Lexington Avenue
New York, New York 10017

Of Counsel:

Siegrun D. Kane
KANE, DALSIMER, KANE,
SULLIVAN and KURUCZ
420 Lexington Avenue
New York, New York 10017

IN THE

SUPREME COURT OF THE UNITED STATES

October Term, 1971

No. 71-945

JEROME H. LEMELSON,

Petitioner,

versus

TOPPER CORPORATION and THE GREAT ATLANTIC & PACIFIC TEA CO., INC.,

Respondents.

ON PETITION FOR A WRIT OF CERTIORARI TO THE UNITED STATES COURT OF APPEALS FOR THE SECOND CIRCUIT

BRIEF FOR RESPONDENTS IN OPPOSITION

Statement of the Case

Petitioner's Statement

neglected to mention that respondents'

accused toy guns were found not to infringe the patent in suit. This finding was affirmed on appeal. Petitioner's Statement should be supplemented to make clear that this case involves:

1) A patent on a toy gun which has been held invalid, and

2) Accused toy guns which have been held not to infringe.

Argument

I. National Uniformity

Petitioner decries an alleged lack of national statistical uniformity in interpreting the statutory standard of obviousness, 35 USC 103. Petitioner does not dispute that the present standards are clear and certain. The

frequent citation of this Court's decision in Graham v. John Deere Co., 383 U.S. 1 (1966), shows recognition of the standards. The absence of "statistical" uniformity shows nothing.

Petitioner's statistics give no reason to change the existing standard. Different holdings on the numerically small total of cases decided are no more than the inevitable results of different men applying clear standards to different facts.

II. The Commerce Clause

The Constitution provides for rewards to "inventors". This provision is not self-executing. The present patent statute is the enabling legislation.

> "It was, and is, left to the discretion of Congress to determine the conditions and limitations upon which, for a limited time, monopoly as to discoveries and inventions may be granted." In re Kaser, 64 F.2d 687, 691 (CCPA 1933)

Petitioner would have the commerce clause rather than the patent clause of the Constitution govern the standard of invention. Petitioner is making this suggestion to the wrong branch of government. If he wants a patent statute with different standards based on the commerce clause, it is to Congress he should petition.

III. Obviousness

Without benefit of enabling legislation, precedent or treatise support, Petitioner suggests that the obviousness standard of Section 103 be gutted to substantially imitate the novelty standard of Section 102.

Thus, Petitioner argues that the combination of prior references must disclose the patented device in operable form. In other words, A + B must = C. It is not enough that A + B make obvious C. This is not the law today. It is enough that A + B make C obvious to a person of ordinary skill in the art.

Petitioner suggests no reason, beyond its own narrow interest in this limited litigation, why the rule should be otherwise. There is no new or important question of law raised in the Petition.

CONCLUSION

The Petition for a Writ of Certiorari should be denied.

Respectfully submitted,

David H. T. Kane
420 Lexington Avenue
New York, New York 10017
Attorney for Respondents

Of Counsel:

Siegrun D. Kane
KANE, DALSIMER, KANE,
SULLIVAN and KURUCZ
420 Lexington Avenue
New York, New York 10017

February 18, 1972

LIBRARY
SUPREME COURT, U. S.

IN THE
SUPREME COURT OF THE UNITED STATES

October Term, 1971

Supreme Court, U.S.
FILED
MAR 1 1972
E. ROBERT SEAVER, CLERK

No. 71-945

JEROME H. LEMELSON,

Petitioner,

versus

TOPPER CORPORATION and THE GREAT ATLANTIC & PACIFIC TEA CO., INC.,

Respondents.

ON PETITION FOR A WRIT OF CERTIORARI TO THE UNITED STATES COURT OF APPEALS FOR THE SECOND CIRCUIT

REPLY BRIEF OF PETITIONER

ELIOT S. GERBER
Attorney for Petitioner
WYATT, GERBER & SHOUP
230 Park Avenue
New York, New York 10017

IN THE

SUPREME COURT OF THE UNITED STATES

October Term, 1971

No. 71-945

JEROME H. LEMELSON,

Petitioner

versus

TOPPER CORPORATION and THE GREAT ATLANTIC & PACIFIC TEA CO., INC.,

Respondents.

ON PETITION FOR A WRIT OF CERTIORARI TO THE UNITED STATES COURT OF APPEALS FOR THE SECOND CIRCUIT

REPLY BRIEF OF PETITIONER

Statement of the Case

The respondents' brief states that the "accused toy guns were found not to infringe the

patent in suit. This finding was affirmed on appeal". In fact, the Circuit Court of Appeals did not affirm the finding of infringement. Footnote 4 of its Opinion is as follows:

> "Our disposition of the issue of the patent's validity renders unnecessary disposition of appellant's claim of infringement. Accordingly, we express no opinion on the District Court's resolution of the issue of whether the doctrine of equivalents or the doctrine of file wrapper estoppel applies to the facts of this case. See 321 F.Supp. at 1285-1288".

Argument

I. National Uniformity

The respondents state that "Petitioner does not dispute that the present standards are clear and certain". Completely to the contrary, Petitioner's whole argument on this point is that the present standards are unclear and uncertain. That the different circuits in this country have effectively different standards of patentability is notorious and is shown by the many disputes regarding forum in patent cases.

II. The Commerce Clause

Contrary to Respondents' brief, Petitioner does not desire a different patent statute. The difficulty does not lie with the statute but rather with the too restrictive interpretation of that statute by some prior decisions of this court.

III. Obviousness

The Respondents do not contest that the prior art, when put together, will not work. Nor do they explain how devices which will not work make a different device obvious. In this case A plus B does not equal C and does not make C obvious.

Respectfully submitted,

ELIOT S. GERBER
WYATT, GERBER & SHOUP
230 Park Avenue
New York, New York 10017
Attorney for Petitioner.

February 28, 1972